2D/3D CAD

JACTON®

JCA / JCB

Cubic Electric Cylinder Actuator

Contents

Product Description 001

Sample Part Number 004

Permissible Critical Bucking Force 005

Specifications 006

Dimensions 011

Product Description

JACTON Electric Cylinder Actuator is for high load linear motion solutions with compact cubic gearbox design. Combined the advantages of Linear actuator and Screw Jack to achieve the high load lifting in industry application.The sealed and high protection class allow the actuator work even in harsh environments. Which is a good solution for Hydraulic and Pneumatic replacement to reduce cost and pollution.

Synchronized Lifting, 2-18 pieces Actuator could be driven by one motor. Simple operation but reliable. Please contact our engineering for synchronized lifting system design. Electric cylinder actuators systems are widely application in tunnel freezers, frying machine, polysilicon ingot furnace, monocrystalline silicon in the photovoltaic industry, vehicle lifters in the vehicle manufacturing industry, flexible tooling and welding lifts, medical devices, woodworking machinery, food machinery, aerospace, defense military, and astronomical telescopes remote control actuators.

Alternative JCB ball screw electric cylinder actuator and JCA acme screw electric cylinder actuator. Load capacity from 2 ton to 20 ton, could be classified as 2 ton, 5 ton , 8 ton , 10 ton , 20 ton unit. Max. speed and stroke could reach 100mm/s and 2.5m. Duty cycle 50%. In the absence of vibration load, JCA acme screw electric cylinder actuator has self-locking and precisely position loads, will hold loads without backdriving. **NOTE:** Brake motors must be specified for all JCB ball screw electric cylinder actuators. And for any acme screw electric cylinder actuator with an efficiency ratio greater than or equal to 30%.

The electric cylinder actuator can be ordered to accept the motor type of your choice, whether geared motor,or AC motor etc. The electric cylinder actuator offers flexibility in order to accept any type to meet your requirement. Available in Standard mount (double input shafts), Direct Motor Mounts and Parallel Motor Mounts with additional gear reducer.

Product Description

● Features:

* Available in Acme Screw(JCA) and Ball Screw(JCB), precise positioning, and uniform speed.
* Load capacity range from 2ton to 20 ton.
* There are no "standard" travel lengths. Each electric cylinder actuator is built to specification.
* Special design of guided bearing increase the stability and side loading capacity.
* Double seal to prevent abrasive particles and contaminants from entering the actuator critical mechanisms, and assures trouble-free operation even in most severe environments.
* Screw Shaft Ends: threaded end, top plate, clevis end, rod end, and fork head.
* Protection class IP55, Optional IP56.
* Precise positioning control , control accuracy reach 0.1mm.
* High stiffness to resist shock load.
* Long life time, low noise, simple maintenance.
* Can be manual operation, electric motor driven, or both together. **Note:** Standard electric cylinder actuators are purchased without a hand wheel, a motor or external gear reducer.
* Synchronized lifting systems with bevel gearboxes, connecting rods, couplings, motor and sensor switches etc.

● Materials:

* Acme Screw: S45C. Custom stainless steel.
* Translating Tube(Push Rod): High strength steel. Custom stainless steel.
* External Protection Tube: High strength steel. Custom stainless steel.
* Worm(Input Shaft): Hardened worm, S45C. Custom stainless steel.
* Worm Gear(Wheel): High strength bronze.
* Travelling Nut: High strength bronze.
* Housing: Ductile Iron. Custom stainless steel.

● Accessories:

* Motorized driven (AC or DC) by asynchronous motors (normal, YEJ brake, YVP variable frequency, B explosion proof, D multi-speed), stepper motors, servo motors with encoders and controllers. IEC motor flange or NEMA C-Face motor adapter for connect with motors. Frequency inverters.
* Manually operated by Aluminum handwheels, or Cast iron handwheels.
* Connection Devices: Couplings. Universal joints. Telescopic universal joints. Connecting shafts.
* Screw Protective Devices: Bellows boot. Telescopic spring covers.
* Safety Devices: Limit switches. Proximity switches. Safety nuts. Anti-backlash nut. Overload safety

Product Description

couplings. Stop nuts. Position Encoders. Overload clutch. Brake motor. Linear braking elements. Wear detection/monitors. Linear guides and rails. Potentiometer. Pressure sensor.

* Others Accessories: Travel nuts. Position indicators. Trunnion adapter plates. Trunnion mounting brackets. Pillow blocks. Flange blocks. Rod end bearings.

- **Applications of Synchronized Lifting**

Jacton Industry provided complete lifting system design and components, Which including electric cylinder actuators, motors, bevel gearboxes, connecting shafts, couplings, brake, clutch etc. Customer just need let us know your requirement of total load capacity, speed, stroke and dimension, Our engineering will provided you a design scheme with calculation process and components selection, CAD drawing is also available.

Synchronized Lifting System of Two Actuators

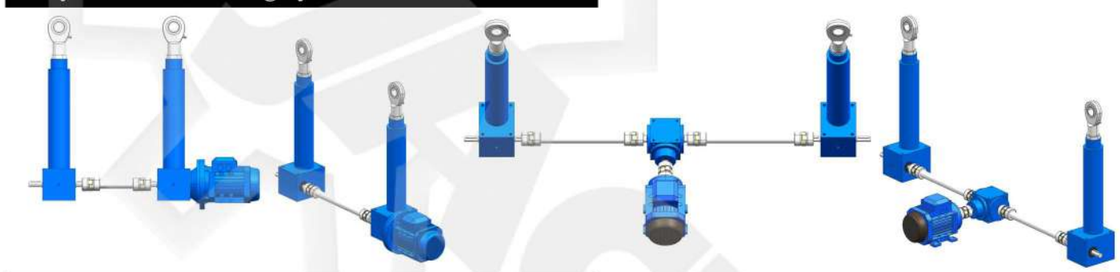

Synchronized Lifting System of Four Actuators

Sample Part Number

Sample Part Number: JCA50-H - 12 - US - 500 - IV - C - BB
(1) (2) (3) (4) (5) (6) (7)

(1) Models

Screw Type	Select Model									
Amce Screw	JCA25-H	JCA25-L	JCA50-H	JCA50-L	JCA80-H	JCA80-L	JCA100-H	JCA100-L	JCA200-H	JCA200-L
Ball Screw	JCB25-H	JCB25-L	JCB50-H	JCB50-L	JCB80-H	JCB80-L	JCB100-H	JCB100-L	JCB200-H	JCB200-L

(2) Lifting Speed

12: 12mm/s

***. Note:** about the corresponding speed, please check below Technical Data Table

(3) Design and Configuration

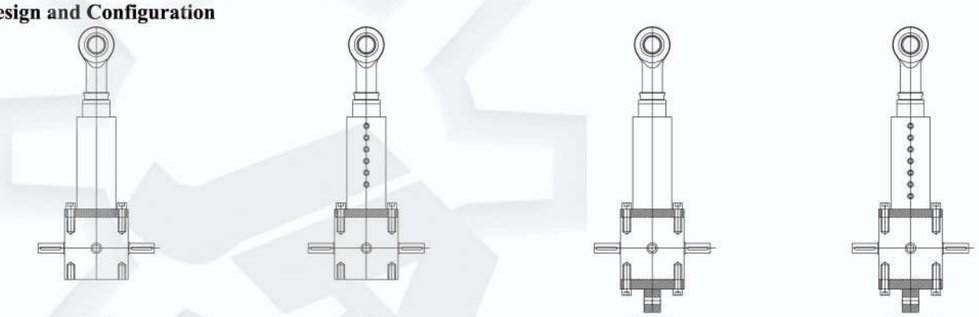

US **UK** **USP** **UKP**

US: Upright, Translating Design
UK: Upright, Anti-rotation Design
USP: Upright, Translating Design, Pivoting Connection
UKP: Upright, Anti-rotation Design, Pivoting Connection

(4) Stroke and (5) Screw Ends

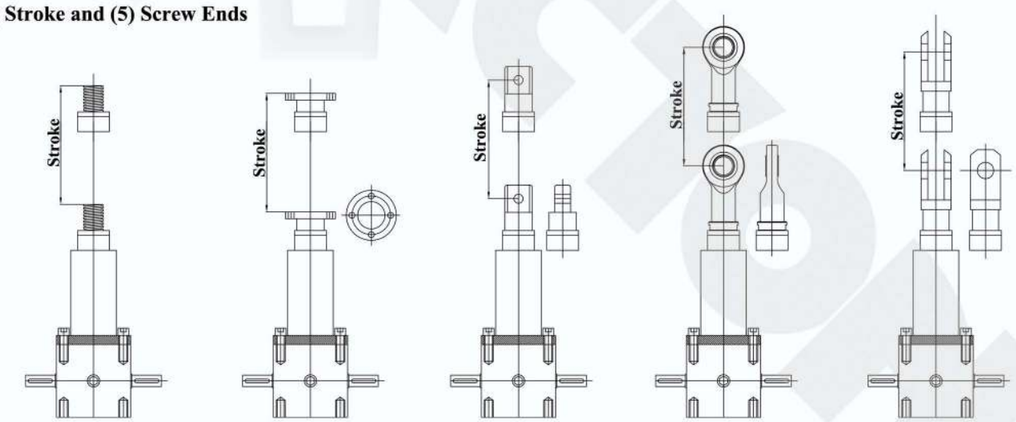

I Threaded End **II Top Plate** **III Clevis End** **IV Rod End** **VI Fork Head**

(6) Input Shafts Types & Motor Flange Types

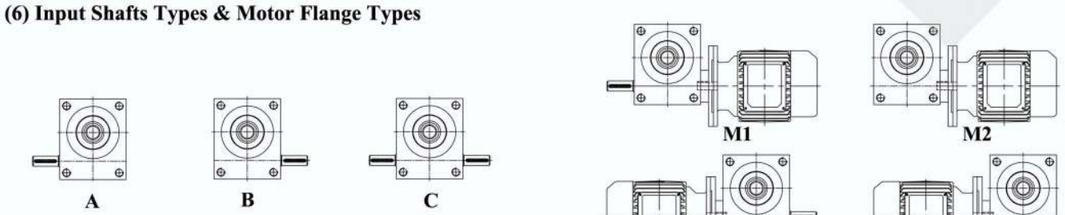

Sample Part Number

(7) Special Requirements

FC: Flex Coupling

UJ: Universal Joint

TUJ: Telescopic Universal Joint

CS: Connecting Shaft

HW: Hand Wheel

PB: Pillow Blocks

FB: Flange Blocks

RE: Rod End

LSB: Linear Shaft & Bushing

LGR: Linear Guides and Rails

TSC: Telescopic Spring

BB: Bellows Boots

PP: Protective Tube

TMP: Trunnion Mount Plate

MF: Motor Flange

WG: Worm Gearbox

GM: Geared Motor

EM: Electric Motor

SPM: Stepper Motor

SVM: Servo Motor

DCM: Dc Motor

RED: Rotary Encoder

PS: Proximity Switch

IT: Inverter

PI: Position Indicator

Permissible Critical Bucking Force

The primary electric cylinders size selection factor is the bucking resistance of screw shaft,Also know as Euler cures, the graphs (**Euler 2: Guided**) below give safety operating state for each size of electric cylinder. Buckling limits are relevant for compressive load only.

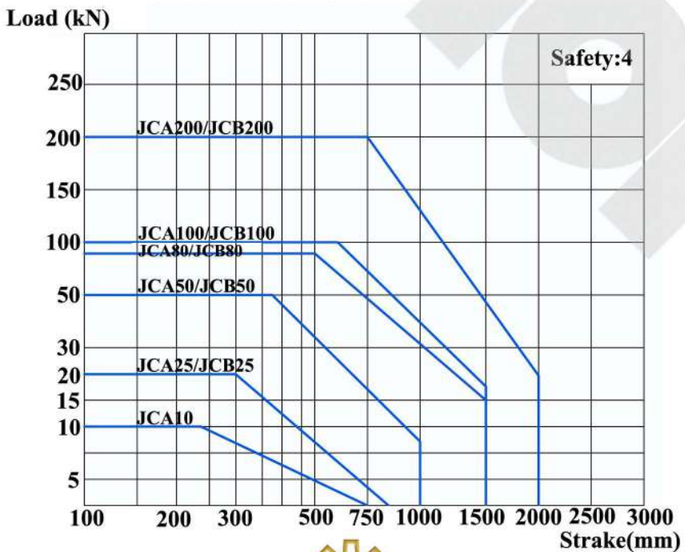

Specifications

***.Note:** The motor power can be reduced if actual load less than rated load

JCA25 ACME Screw Electric Cylinder Actuator Technical Data Table

Type	Rated Push KN	Speed mm/s	Stroke for input turn mm	Max. input power kw	Drive	Motor or reducer model
JCA25-H	20	12	1.04	1.14	Helical geared motor	RXF57DT90S4 1.1kw 729rpm
JCA25-H	20	9	1.04	1.14	Helical geared motor	RXF57DT80N4 0.75kw 582rpm
JCA25-L	20	6	0.25	0.55	MOTOR	0.55kw 1400rpm
JCA25-H	20	5	1.04	1.14	Worm gear motor	NMRV040 71B4 0.37kw 280rpm
JCA25-L	20	4	0.25	0.55	MOTOR	0.37kw 900rpm
JCA25-L	20	3	0.25	0.55	Helical geared motor	RXF57DT71D4 0.37kw 719rpm
JCA25-H	20	2.5	1.04	1.14	Worm gear motor	NMRV040 71A4 0.25kw 140rpm
JCA25-L	20	2	0.25	0.55	Helical geared motor	RXF57DR63L4 0.25kw 446rpm
JCA25-H	20	1.2	1.04	1.14	Worm gear motor	NMRV030 63A4 0.12kw 70rpm
JCA25-L	20	1.2	0.25	0.55	Worm gear motor	NMRV030 63B4 0.18kw 280rpm
JCA25-H	20	0.8	1.04	1.14	Worm gear motor	NMRV030 63A4 0.12kw 46rpm
JCA25-L	20	0.6	0.25	0.55	Worm gear motor	NMRV030 63A4 0.12kw 140rpm
JCA25-L	20	0.3	0.25	0.55	Worm gear motor	NMRV030 63A4 0.12kw 70rpm
JCA25-L	20	0.2	0.25	0.55	Worm gear motor	NMRV030 63A4 0.12kw 46rpm

JCB25 BALL Screw Electric Cylinder Actuator Technical Data Table

Type	Rated Push KN	Speed mm/s	Stroke for input turn mm	Max. input power kw	Drive	Motor or reducer model
JCB25-L	20	10	0.42	0.55	MOTOR	0.55kw 1400rpm
JCB25-H	20	8.3	1.74	1.14	Worm gear motor	NMRV040 71B4 0.37kw 280rpm
JCB25-L	20	6.7	0.42	0.55	MOTOR	0.37kw 900rpm
JCB25-L	20	5	0.42	0.55	Helical geared motor	RXF57DT71D4 0.37kw 719rpm
JCB25-H	20	4.2	1.74	1.14	Worm gear motor	NMRV040 71A4 0.25kw 140rpm
JCB25-L	20	3.3	0.42	0.55	Helical geared motor	RXF57DR63L4 0.25kw 446rpm
JCB25-H	20	2	1.74	1.14	Worm gear motor	NMRV030 63A4 0.12kw 70rpm
JCB25-L	20	2	0.42	0.55	Worm gear motor	NMRV030 63B4 0.18kw 280rpm
JCB25-H	20	1.3	1.74	1.14	Worm gear motor	NMRV030 63A4 0.12kw 46rpm
JCB25-L	20	1	0.42	0.55	Worm gear motor	NMRV030 63A4 0.12kw 140rpm
JCB25-L	20	0.5	0.42	0.55	Worm gear motor	NMRV030 63A4 0.12kw 70rpm
JCB25-L	20	0.3	0.42	0.55	Worm gear motor	NMRV030 63A4 0.12kw 46rpm

Specifications

***.Note:** The motor power can be reduced if actual load less than rated load

JCA50 ACME Screw Electric Cylinder Actuator Technical Data Table

Type	Rated Push KN	Speed mm/s	Stroke for input turn mm	Max. input power kw	Drive	Motor or reducer model
JCA50-H	50	9	1.04	2.2	Helical geared motor	RXF57DT90L4 1.5kw 534rpm
JCA50-L	40	6	0.25	1.1	MOTOR	1.1kw 1400rpm
JCA50-H	50	5	1.04	2.2	Worm gear motor	NMRV050 80B2 1.1kw 280rpm
JCA50-L	50	4	0.25	1.1	MOTOR	1.1kw 900rpm
JCA50-L	50	3	0.25	1.1	Helical geared motor	RXF57DT80N4 0.75kw 719rpm
JCA50-H	50	2.5	1.04	2.2	Worm gear motor	NMRV050 80A4 0.55kw 140rpm
JCA50-L	50	2	0.25	1.1	Helical geared motor	RXF57DT80K4 0.55kw 447rpm
JCA50-H	50	1.2	1.04	2.2	Worm gear motor	NMRV040 71B4 0.37kw 70rpm
JCA50-L	50	1.2	0.25	1.1	Worm gear motor	NMRV040 71B4 0.37kw 280rpm
JCA50-H	50	0.8	1.04	2.2	Worm gear motor	NMRV040 71A4 0.25kw 46rpm
JCA50-L	50	0.6	0.25	1.1	Worm gear motor	NMRV040 71A4 0.25kw 140rpm
JCA50-L	50	0.3	0.25	1.1	Worm gear motor	NMRV030 63B4 0.18kw 70rpm
JCA50-L	50	0.2	0.25	1.1	Worm gear motor	NMRV030 63C6 0.15kw 45rpm

JCB50 BALL Screw Electric Cylinder Actuator Technical Data Table

Type	Rated Push KN	Speed mm/s	Stroke for input turn mm	Max. input power kw	Drive	Motor or reducer model
JCB50-L	50	8.6	0.36	1.1	MOTOR	1.1kw 1400rpm
JCB50-H	50	7	1.48	2.2	Worm gear motor	NMRV050 80B2 1.1kw 280rpm
JCB50-L	50	5.7	0.36	1.1	MOTOR	0.75kw 900rpm
JCB50-L	50	4.3	0.36	1.1	Helical geared motor	RXF57DT80N4 0.75kw 719rpm
JCB50-H	50	3.6	1.48	2.2	Worm gear motor	NMRV050 80A4 0.55kw 140rpm
JCB50-L	50	2.9	0.36	1.1	Helical geared motor	RXF57DT80K4 0.55kw 447rpm
JCB50-H	50	1.7	1.48	2.2	Worm gear motor	NMRV040 71B4 0.37kw 70rpm
JCB50-L	50	1.7	0.36	1.1	Worm gear motor	NMRV040 71B4 0.37kw 280rpm
JCB50-H	50	1.1	1.48	2.2	Worm gear motor	NMRV040 71A4 0.25kw 46rpm
JCB50-L	50	0.9	0.36	1.1	Worm gear motor	NMRV040 71A4 0.25kw 140rpm
JCB50-L	50	0.4	0.36	1.1	Worm gear motor	NMRV030 63B4 0.18kw 70rpm
JCB50-L	50	0.3	0.36	1.1	Worm gear motor	NMRV030 63C6 0.15kw 45rpm

Specifications

***.Note:** The motor power can be reduced if actual load less than rated load

JCA80 ACME Screw Electric Cylinder Actuator Technical Data Table

Type	Rated Push KN	Speed mm/s	Stroke for input turn mm	Max. input power kw	Drive	Motor or reducer model
JCA80-H	60	12	1.03	2.5	Helical geared motor	RXF57DT100M4 2.2kw 734rpm
JCA80-H	75	9	1.03	2.5	Helical geared motor	RXF57DT100M4 2.2kw 534rpm
JCA80-L	60	6	0.25	1.5	MOTOR	1.5kw 1400rpm
JCA80-H	80	5	1.03	2.5	Worm gear motor	NMRV063 90L2 2.2kw 280rpm
JCA80-L	80	4	0.25	1.5	MOTOR	1.5kw 900rpm
JCA80-L	80	3	0.25	1.5	Helical geared motor	RXF57DT90L4 1.5kw 734rpm
JCA80-H	80	2.5	1.03	2.5	Worm gear motor	NMRV063 90S4 1.1kw 140rpm
JCA80-L	80	2	0.25	1.5	Helical geared motor	RXF57DT90S4 1.1kw 481rpm
JCA80-H	80	1.2	1.03	2.5	Worm gear motor	NMRV050 80B4 0.75kw 70rpm
JCA80-L	80	1.2	0.25	1.5	Worm gear motor	NMRV050 80B4 0.75kw 280rpm
JCA80-H	80	0.8	1.03	2.5	Worm gear motor	NMRV050 80A4 0.55kw 46rpm
JCA80-L	80	0.6	0.25	1.5	Worm gear motor	NMRV040 71B4 0.37kw 140rpm
JCA80-L	80	0.3	0.25	1.5	Worm gear motor	NMRV040 71A4 0.25kw 70rpm
JCA80-L	80	0.2	0.25	1.5	Worm gear motor	NMRV030 63C6 0.15kw 45rpm

JCB80 BALL Screw Electric Cylinder Actuator Technical Data Table

Type	Rated Push KN	Speed mm/s	Stroke for input turn mm	Max. input power kw	Drive	Motor or reducer model
JCB80-H	60	11	1.29	2.5	Helical geared motor	RXF57DT90L4 1.5kw 534rpm
JCB80-L	60	7.5	0.31	1.5	MOTOR	1.5kw 1400rpm
JCB80-H	60	6.3	1.29	2.5	Worm gear motor	NMRV050 80B2 1.1kw 280rpm
JCB80-L	60	5	0.31	1.5	MOTOR	1.1kw 900rpm
JCB80-L	60	3.6	0.31	1.5	Helical geared motor	RXF57DT80N4 0.75kw 719rpm
JCB80-H	60	3.1	1.29	2.5	Worm gear motor	NMRV040 80K4 0.55kw 140rpm
JCB80-L	60	2.5	0.31	1.5	Helical geared motor	RXF57DT80K4 0.55kw 467rpm
JCB80-H	60	1.5	1.29	2.5	Worm gear motor	NMRV040 71B4 0.37kw 70rpm
JCB80-L	60	1.5	0.31	1.5	Worm gear motor	NMRV040 71A2 0.37kw 280rpm
JCB80-H	60	1	1.29	2.5	Worm gear motor	NMRV040 71A4 0.25kw 46rpm
JCB80-L	60	0.8	0.31	1.5	Worm gear motor	NMRV040 71A4 0.25kw 140rpm
JCB80-L	60	0.4	0.31	1.5	Worm gear motor	NMRV030 63B4 0.18kw 70rpm
JCB80-L	60	0.3	0.31	1.5	Worm gear motor	NMRV030 63A4 0.12kw 45rpm

Specifications

***.Note:** The motor power can be reduced if actual load less than rated load

JCA100 ACME Screw Electric Cylinder Actuator Technical Data Table

Type	Rated Push KN	Speed mm/s	Stroke for input turn mm	Max. input power kw	Drive	Motor or reducer model
JCA100-H	65	13	1.16	3	Helical geared motor	RXF57DV100L4 3kw 729rpm
JCA100-H	80	9	1.16	3	Helical geared motor	RXF57DT100L4 3kw 530rpm
JCA100-L	75	6.6	0.28	2.2	MOTOR	2.2kw 1400rpm
JCA100-H	100	5.4	1.16	3	Worm gear motor	NMRV075 100LA2 3kw 280rpm
JCA100-L	100	4.2	0.28	2.2	MOTOR	2.2kw 900rpm
JCA100-L	100	3.3	0.28	2.2	Helical geared motor	RXF57DV100M4 2.2kw 734rpm
JCA100-H	100	2.7	1.16	3	Worm gear motor	NMRV063 90L4 1.5kw 140rpm
JCA100-L	100	2.5	0.28	2.2	Helical geared motor	RXF57DT90L4 1.5kw 484rpm
JCA100-H	100	1.3	1.16	3	Worm gear motor	NMRV050 80B4 0.75kw 70rpm
JCA100-L	100	1.2	0.28	2.2	Worm gear motor	NMRV050 80B2 1.1kw 280rpm
JCA100-H	100	0.9	1.16	3	Worm gear motor	NMRV050 80A4 0.55kw 46rpm
JCA100-L	100	0.6	0.28	2.2	Worm gear motor	NMRV040 71B2 0.55kw 140rpm
JCA100-L	100	0.3	0.28	2.2	Worm gear motor	NMRV040 71B4 0.37kw 70rpm
JCA100-L	100	0.2	0.28	2.2	Worm gear motor	NMRV040 71A4 0.25kw 46rpm

JCB100 BALL Screw Electric Cylinder Actuator Technical Data Table

Type	Rated Push KN	Speed mm/s	Stroke for input turn mm	Max. input power kw	Drive	Motor or reducer model
JCB100-H	80	11	1.29	3	Helical geared motor	RXF57DT100M4 2.2kw 534rpm
JCB100-L	80	7.3	0.31	2.2	MOTOR	2.2kw 1400rpm
JCB100-H	80	6	1.29	3	Worm gear motor	NMRV050 90S2 1.5kw 280rpm
JCB100-L	80	4.7	0.31	2.2	MOTOR	1.5kw 900rpm
JCB100-L	80	3.7	0.31	2.2	Helical geared motor	RXF57DT90S4 1.1kw 729rpm
JCB100-H	80	3	1.29	3	Worm gear motor	NMRV050 80B4 0.75kw 140rpm
JCB100-L	80	2.8	0.31	2.2	Helical geared motor	RXF57DT80N4 0.75kw 474rpm
JCB100-H	80	1.4	1.29	3	Worm gear motor	NMRV050 71B4 0.37kw 70rpm
JCB100-L	80	1.3	0.31	2.2	Worm gear motor	NMRV04071B2 0.55kw 280rpm
JCB100-H	80	1	1.29	3	Worm gear motor	NMRV050 71B4 0.37kw 46rpm
JCB100-L	80	0.7	0.31	2.2	Worm gear motor	NMRV040 71B4 0.37kw 140rpm
JCB100-L	80	0.3	0.31	2.2	Worm gear motor	NMRV040 71A4 0.25kw 70rpm
JCB100-L	80	0.2	0.31	2.2	Worm gear motor	NMRV040 63B4 0.18kw 46rpm

Specifications

***.Note:** The motor power can be reduced if actual load less than rated load

JCA200 ACME Screw Electric Cylinder Actuator Technical Data Table

Type	Rated Push KN	Speed mm/s	Stroke for input turn mm	Max. input power kw	Drive	Motor or reducer model
JCA200-H	85	12	1.37	4	Helical geared motor	RXF57DT112M4 4kw 538rpm
JCA200-L	80	8	0.34	3.5	MOTOR	3kw 1400rpm
JCA200-H	130	6.5	1.37	4	Worm gear motor	NMRV075 112M2 4kw 280rpm
JCA200-L	110	5	0.34	3.5	MOTOR	3kw 900rpm
JCA200-L	130	4	0.34	3.5	Helical geared motor	RXF57DV100L4 3kw 729rpm
JCA200-H	200	3.3	1.37	4	Worm gear motor	NMRV075 112M4 4kw 140rpm
JCA200-L	200	2.6	0.34	3.5	Helical geared motor	RXF57DV100L4 3kw 446rpm
JCA200-H	200	1.6	1.37	4	Worm gear motor	NMRV090 100LA4 2.2kw 70rpm
JCA200-L	200	1.5	0.34	3.5	Worm gear motor	NMRV063 90L2 2.2kw 280rpm
JCA200-H	200	1	1.37	4	Worm gear motor	NMRV075 90L4 1.5kw 46rpm
JCA200-L	200	0.8	0.34	3.5	Worm gear motor	NMRV063 90L4 1.5kw 140rpm
JCA200-L	200	0.4	0.34	3.5	Worm gear motor	NMRV063 90L4 1.1kw 70rpm
JCA200-L	200	0.3	0.34	3.5	Worm gear motor	NMRV063 80B4 0.75kw 46rpm

JCB200 BALL Screw Electric Cylinder Actuator Technical Data Table

Type	Rated Push KN	Speed mm/s	Stroke for input turn mm	Max. input power kw	Drive	Motor or reducer model
JCB200-H	100	11	2.29	4	Worm gear motor	NMRV075 100LA2 3kw 280rpm
JCB200-L	100	8.3	0.57	3.5	MOTOR	3kw 900rpm
JCB200-L	100	6.7	0.57	3.5	Helical geared motor	RXF57DV100L4 3kw 729rpm
JCB200-H	100	5.5	2.29	4	Worm gear motor	NMRV063 90L4 1.5kw 140rpm
JCB200-L	100	4.3	0.57	3.5	Helical geared motor	RXF57DV100M4 2.2kw 450rpm
JCB200-H	100	2.7	2.29	4	Worm gear motor	NMRV063 80B4 0.75kw 70rpm
JCB200-L	100	2.5	0.57	3.5	Worm gear motor	NMRV050 90S2 1.5kw 280rpm
JCB200-H	100	1.7	2.29	4	Worm gear motor	NMRV050 80A4 0.55kw 46rpm
JCB200-L	100	1.3	0.57	3.5	Worm gear motor	NMRV050 80B4 0.75kw 140rpm
JCB200-L	100	0.7	0.57	3.5	Worm gear motor	NMRV050 71B4 0.37kw 70rpm
JCB200-L	100	0.5	0.57	3.5	Worm gear motor	NMRV050 71A4 0.25kw 46rpm

Dimensions

JCA25/JCB25 Electric Cylinder Actuator Dimensional Drawings

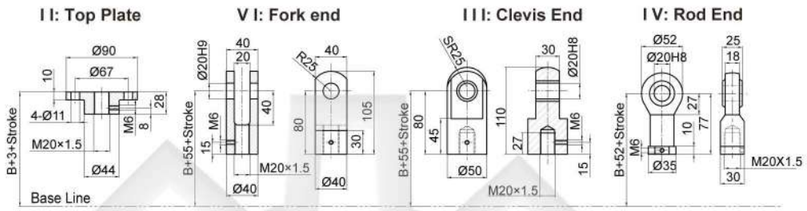

Standard type

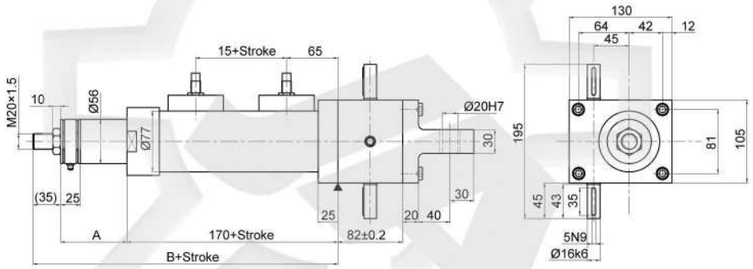

	JCA25	JCB25
A	80	110
B	285	315

With Motor type

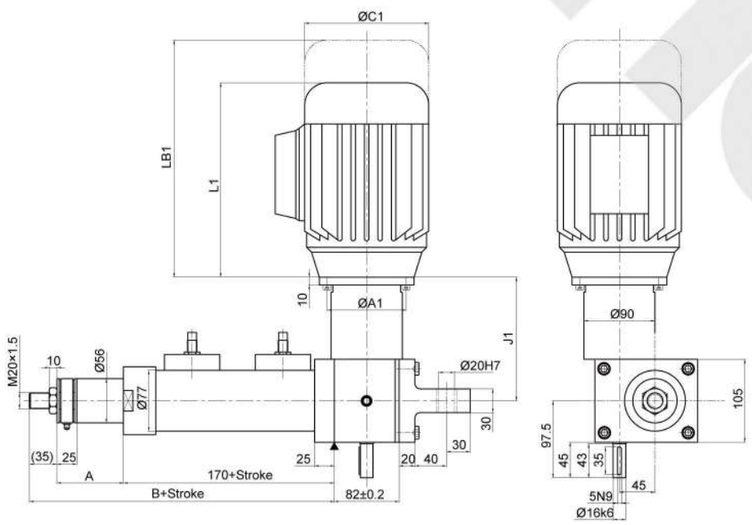

	80B14	90B14
A1	100	115
C1	157	175
L1	246	270
LB1	300	334
J1	155	165

*. Dimensions are subject to change without notice

Dimensions

JCA25/JCB25 Electric Cylinder Actuator Dimensional Drawings

With helical geared motor type

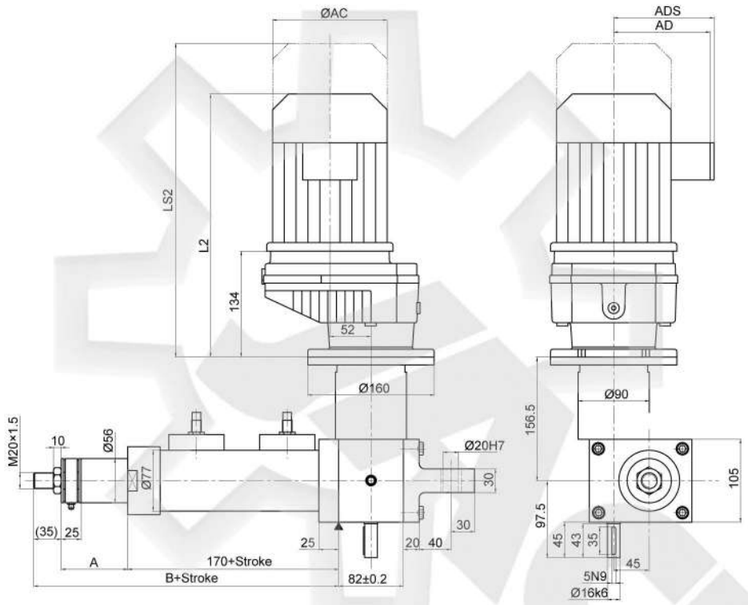

	DR63	DT71D	DT80	DT90
AC	132	145	145	197
AD	105	122	122	154
ADS	105	127	127	161
L2	319	333	383	403
LS2	374	397	447	488

With worm gear motor type

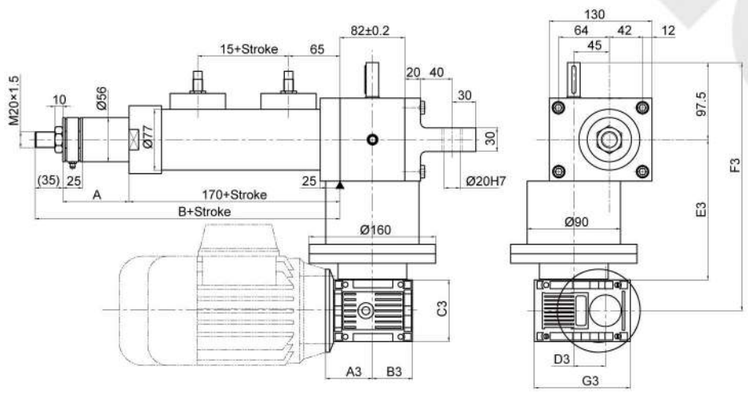

	NMRV030	NMRV040
A3	55	70
B3	40	50
C3	63	78
D3	30	40
E3	156.5	169.5
F3	285.5	306
G3	97	121.5

*. Dimensions are subject to change without notice

Dimensions

JCA50/JCB50 Electric Cylinder Actuator Dimensional Drawings

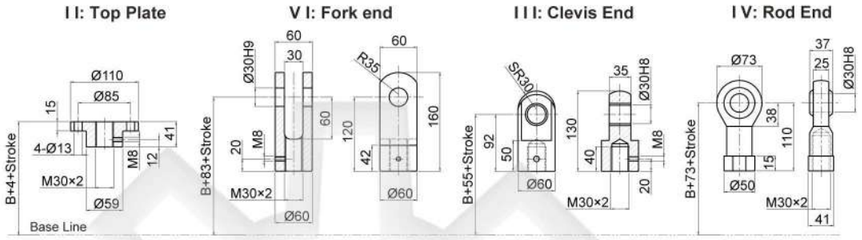

Standard type

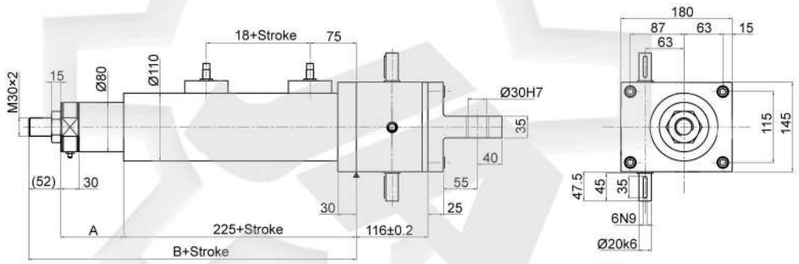

	JCA50	JCB50
A	100	140
B	377	417

With Motor type

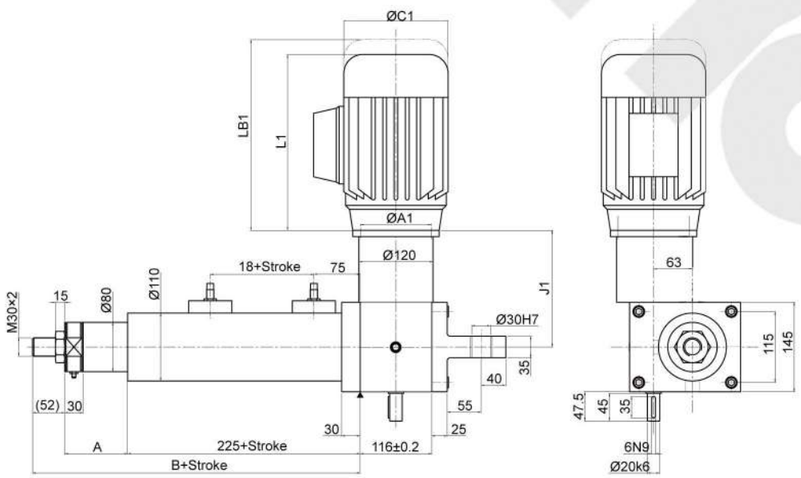

	90B14	100B14	112B14
A1	115	130	130
C1	175	196	220
L1	310	317	335
LB1	334	384	393
J1	190	200	200

*. Dimensions are subject to change without notice

Dimensions

JCA50/JCB50 Electric Cylinder Actuator Dimensional Drawings

With helical geared motor type

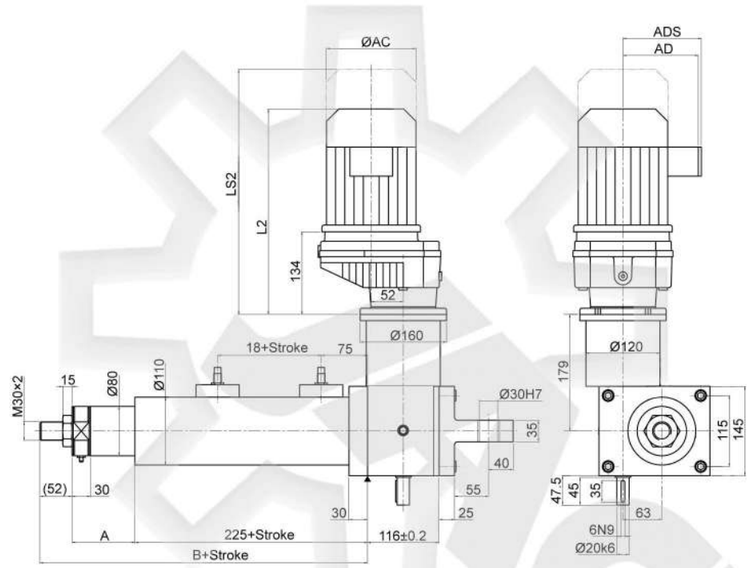

	DT80	DT90	DV100M	DV100L
AC	145	197	197	197
AD	122	154	166	166
ADS	127	161	166	166
L2	383	403	453	483
LS2	447	488	538	568

With worm gear motor type

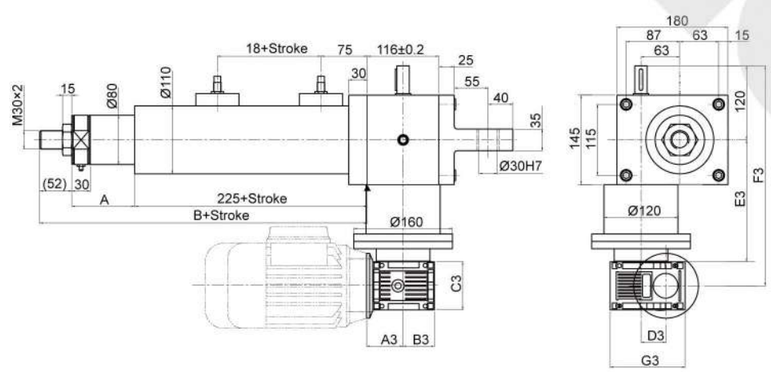

	NMRV030	NMRV040	NMRV050
A3	55	70	80
B3	40	50	60
C3	63	78	92
D3	30	40	50
E3	189	199	199
F3	340.5	358	365
G3	97	121.5	144

*. Dimensions are subject to change without notice

Dimensions

JCA80/JCB80 Electric Cylinder Actuator Dimensional Drawings

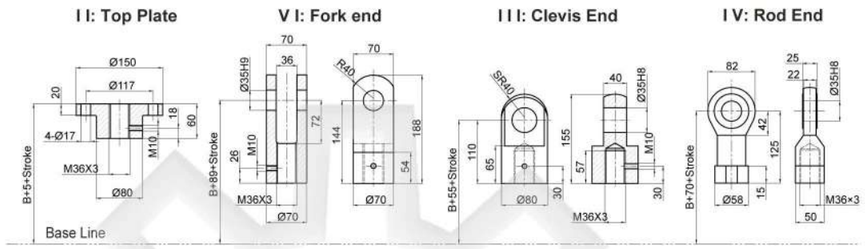

Standard type

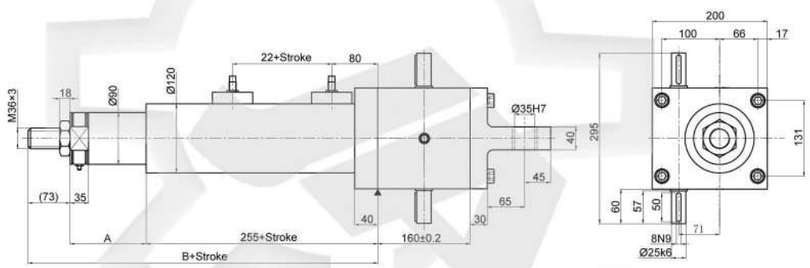

	JCA80	JCB80
A	130	185
B	458	513

With Motor type

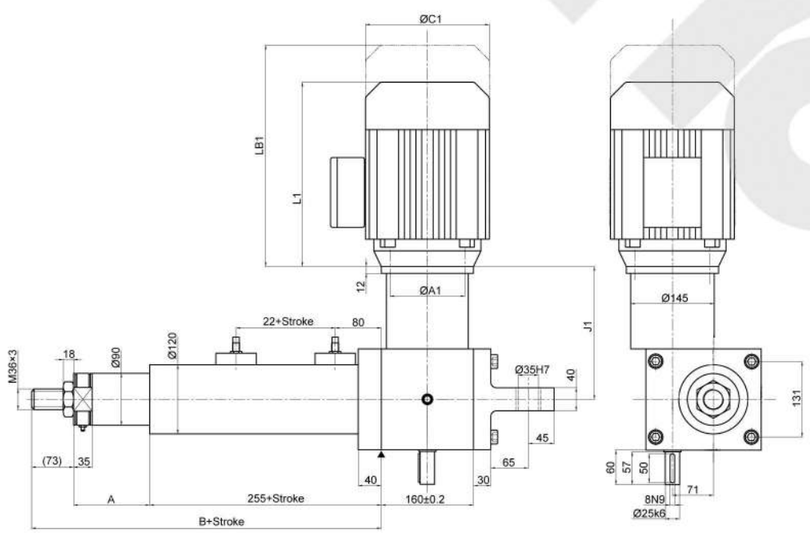

	90B14	100B14	112B14
A1	115	130	130
C1	175	196	220
L1	310	317	335
LB1	334	384	393
J1	221	231	231

*. Dimensions are subject to change without notice

Dimensions

JCA80/JCB80 Electric Cylinder Actuator Dimensional Drawings

With helical geared motor type

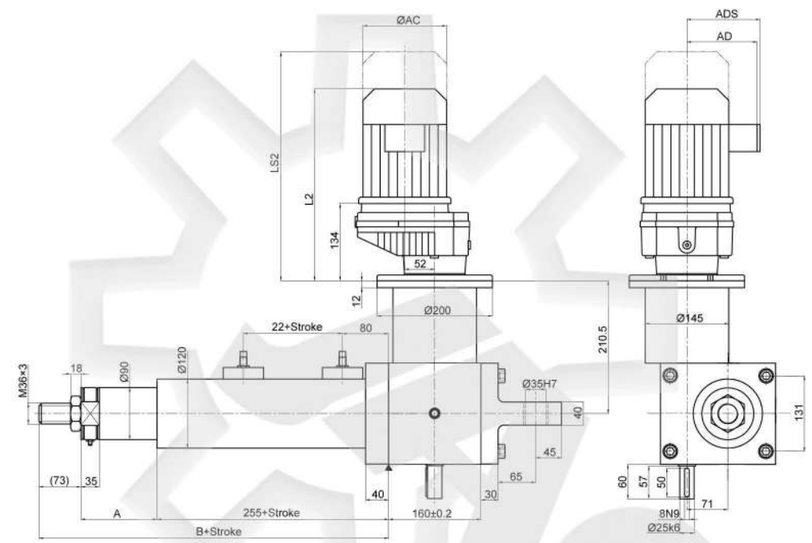

	DT90	DV100M	DV100L
AC	197	197	197
AD	154	166	166
ADS	161	166	166
L2	403	453	483
LS2	488	538	568

With worm gear motor type

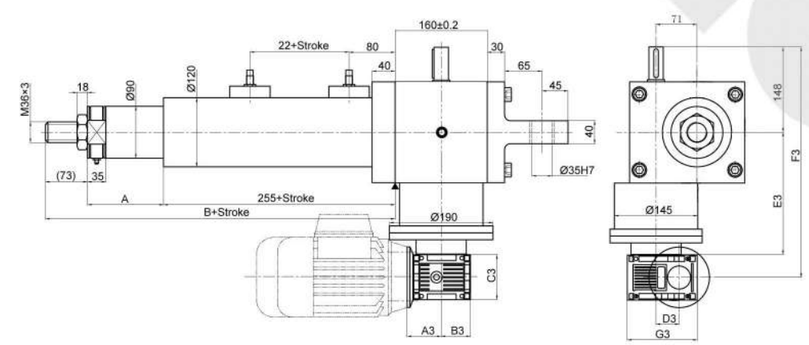

	NMRV030	NMRV040	NMRV050	NMRV063
A3	55	70	80	95
B3	40	50	60	72
C3	63	78	92	112
D3	30	40	50	63
E3	206.5	219.5	230.5	230.5
F3	335.5	356	364	374
G3	97	121.5	144	174

*. Dimensions are subject to change without notice

Dimensions

JCA100/JCB100 Electric Cylinder Actuator Dimensional Drawings

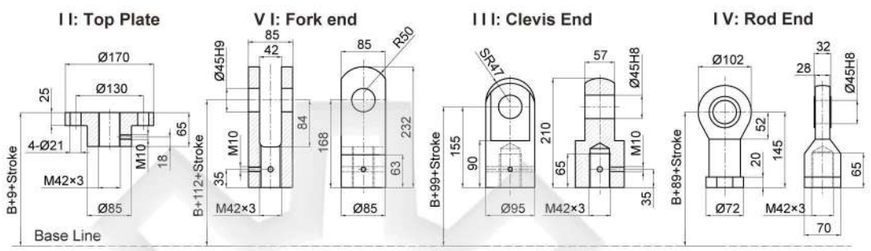

Standard type

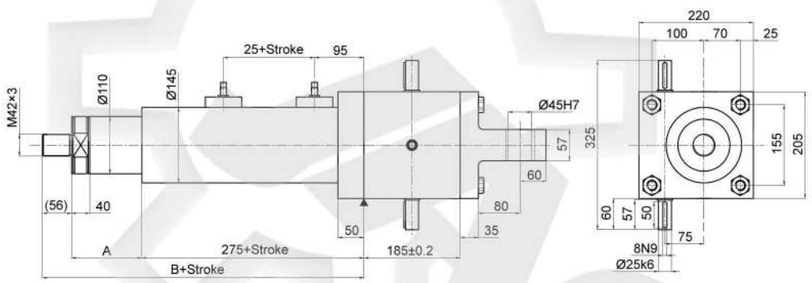

	JCA100	JCB100
A	160	220
B	491	551

With Motor type

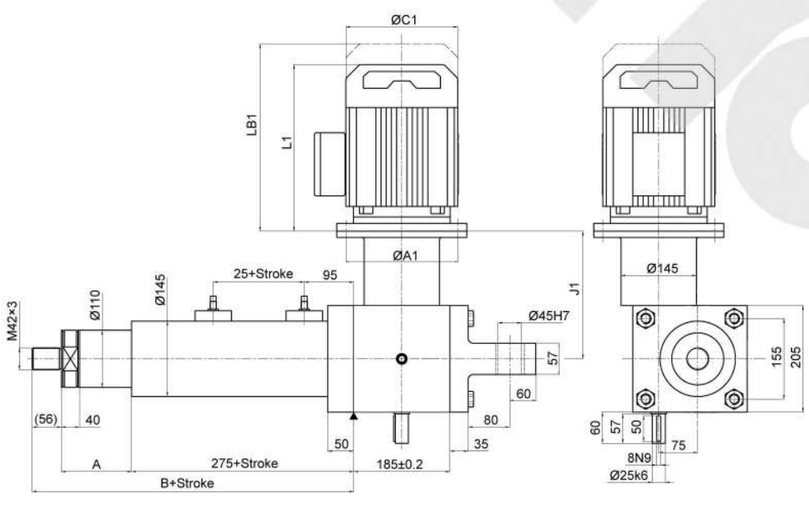

	100B5	112B5	132B5
A1	215	215	265
C1	215	240	275
L1	317	335	395
LB1	384	393	496
J1	246	246	275.5

*. Dimensions are subject to change without notice

Dimensions

JCA100/JCB100 Electric Cylinder Actuator Dimensional Drawings

With helical geared motor type

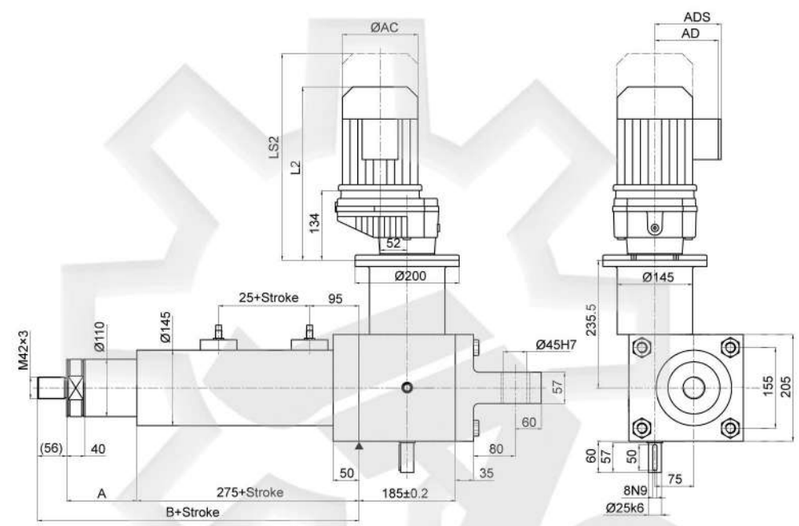

	DT80	DT90	DV100M	DV100L
AC	145	197	197	197
AD	122	154	166	166
ADS	127	161	166	166
L2	383	403	453	483
LS2	447	488	538	568

With worm gear motor type

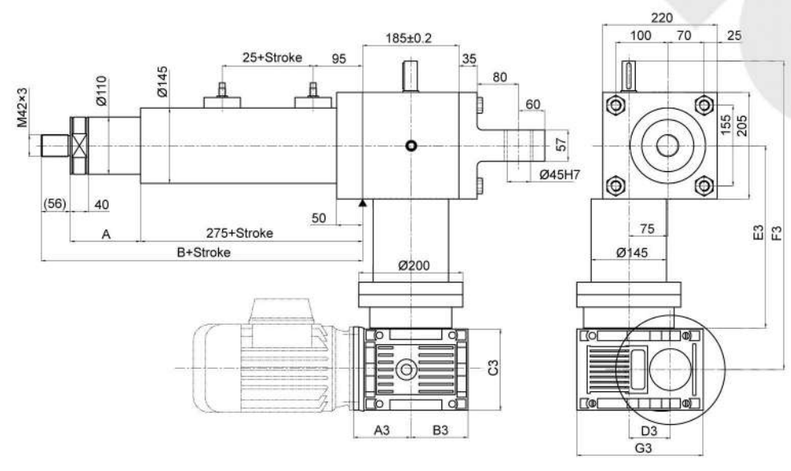

	NMRV040	NMRV050	NMRV063	NMRV075
A3	70	80	95	112.5
B3	50	60	72	86
C3	78	92	112	120
D3	40	50	63	75
E3	255.5	255.5	275.5	275.5
F3	457	464	494	498
G3	121.5	144	174	205

*. Dimensions are subject to change without notice

Dimensions

JCA200/JCB200 Electric Cylinder Actuator Dimensional Drawings

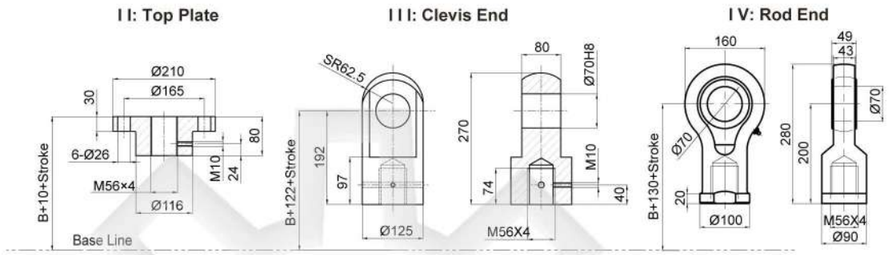

Standard type

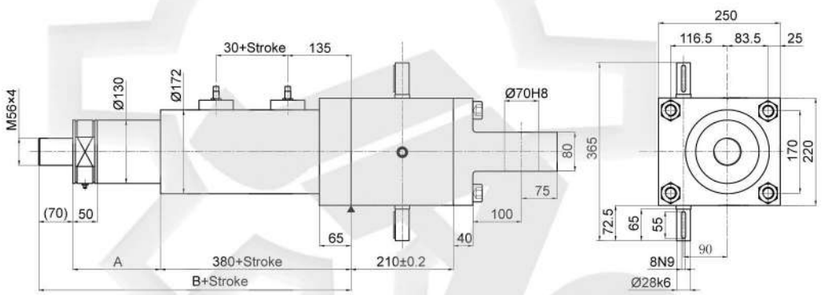

	JCA200	JCB200
A	180	205
B	630	655

With Motor type

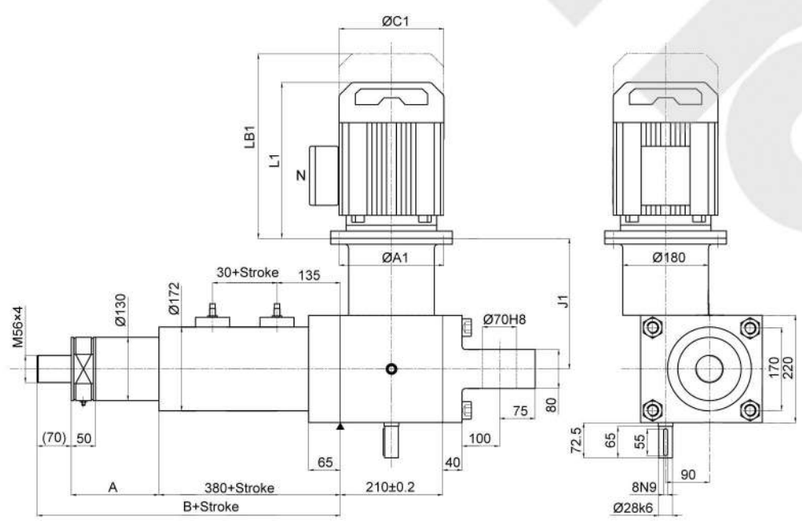

	100B5	112B5	132B5
A1	215	215	265
C1	215	240	275
L1	317	335	395
LB1	384	393	496
J1	268	268	288

*. Dimensions are subject to change without notice

Dimensions

JCA200/JCB200 Electric Cylinder Actuator Dimensional Drawings

With helical geared motor type

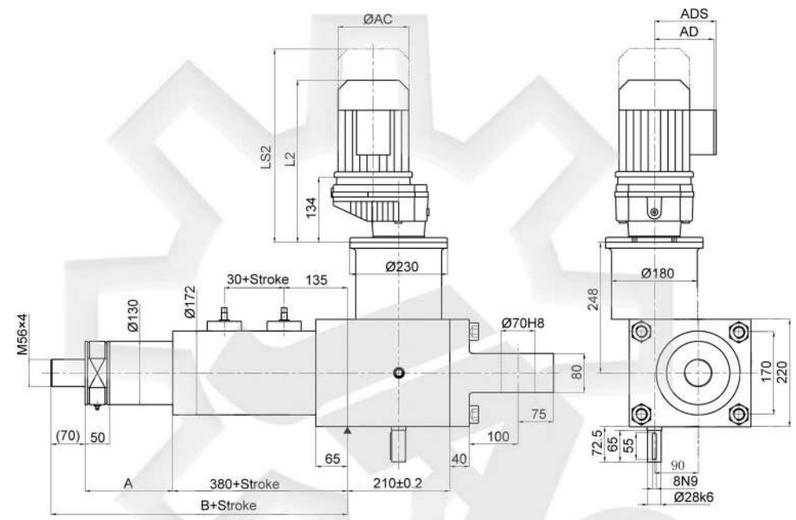

	DV100M	DV100L	DV112M
AC	197	197	221
AD	166	166	179
ADS	166	166	182
L2	453	483	488
LS2	538	568	568

With worm gear motor type

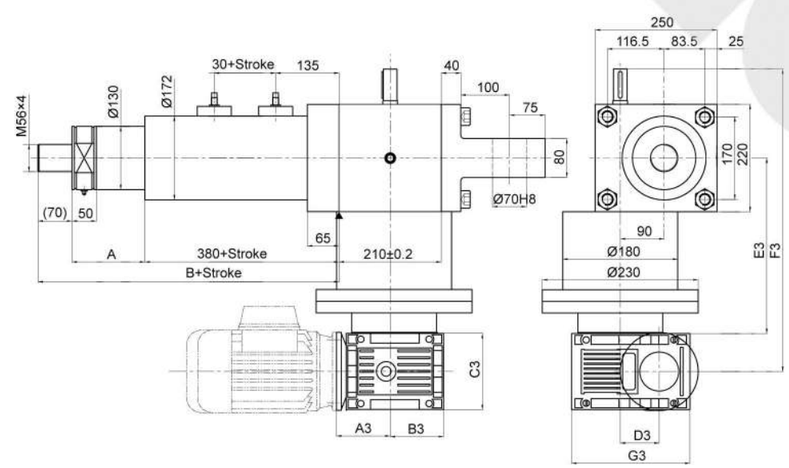

	NMRV050	NMRV063	NMRV075	NMRV090
A3	80	95	112.5	129.5
B3	60	72	86	103
C3	92	112	120	140
D3	50	63	75	90
E3	257.5	267.5	267.5	288
F3	486	506	510	540.5
G3	144	174	205	238

*. Dimensions are subject to change without notice