JTE

Electric Cylinder

Contents

Product Description 001

Sample Part Number 004

Permissible Critical Bucking Force 005

Specifications 006

Dimensions 007

Product Description

JACTON JTE Series Electric Cylinders are basically screw jacks with travelling nut, but with lifting cylinder design. Combined the advantages of Linear actuator and Screw Jack to achieve the high load lifting in industry application. Available in Ball Screw and Acme Screw. The screw is fully enclosed by push rod which is guided in external protection tube, that is well suited for industrial environments where protection of the lifting screw mechanism and dependable operation are critical, and the protection level can reach IP55, IP56. As a better choice over hydraulic actuators or pneumatic cylinders with this clean alternative, easy to install, control, low maintenance and a quieter solution. In the absence of vibration load, Electric Cylinder with acme screw has self-locking and precisely position loads, will hold loads without backdriving. But Ball Screw Electric Cylinder has not self-locking, brake motor is required.

Electric Cylinder Actuators lift and precisely position up to 20 tons. They are widely application in tunnel freezers, frying machine, polysilicon ingot furnace, monocrystalline silicon in the photovoltaic industry, vehicle lifters in the vehicle manufacturing industry, flexible tooling and welding lifts, medical devices, woodworking machinery, food machinery, aerospace, defense military, and astronomical telescopes remote control actuators.

The JTE Series Electric Cylinder can be ordered to accept the motor type of your choice, whether geared motor, or AC motor etc. Available in Standard(double input shafts), Direct Motor Mounts and Parallel Motor Mounts with additional Gearbox.

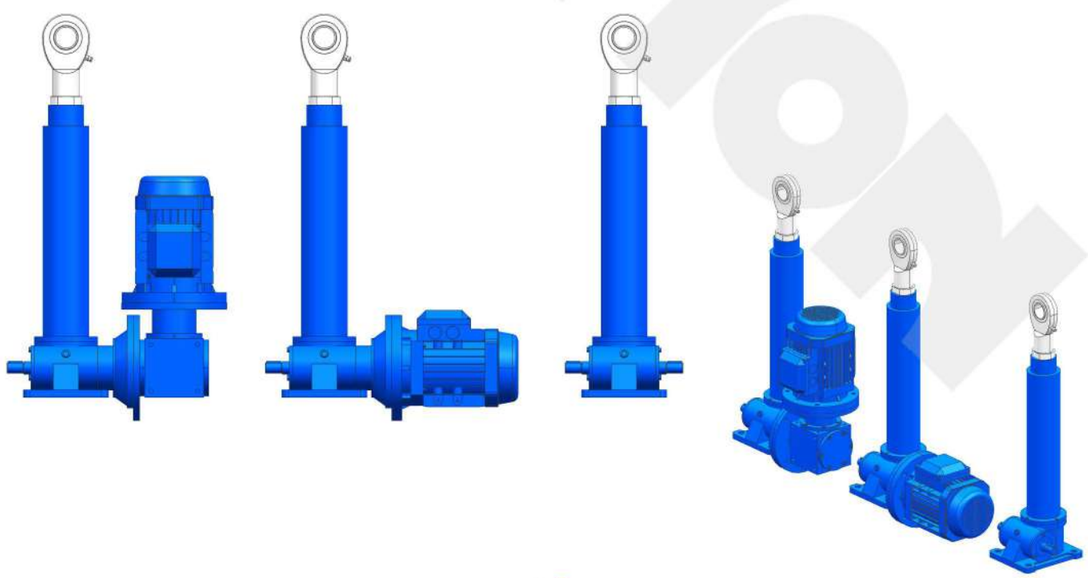

Product Description

● Features:

* Available in Acme Screw and Ball Screw, precise positioning, and uniform speed.
* Load capacity range from 2.5 ton to 20 ton.
* There are no "standard" travel lengths. each electric cylinder is built to specification.
* Machine Screw Ends: Threaded End, Top Plate, Clevis End, Rod End, and Fork Head.
* Can be operated by manually operated or by electrically driven.
* Double seal to prevent abrasive particles and contaminants from entering the actuator critical mechanisms, and assures trouble-free operation even in most severe environments.
* Synchronized Lifting System, 2-16 pieces Actuators could be driven by one motor.
* Standard Electric Cylinders are purchased without a motor or external gearbox (reducer). **NOTE:** Brake motors must be specified for all Ball Screws Electric Cylinders. and for any Acme Screw Electric Cylinder with an efficiency ratio greater than or equal to 30%.

● Materials:

* Acme Screw: Carbon steel #45. Custom stainless steel.
* Translating Tube(Push Rod): High strength steel. Custom stainless steel.
* External Protection Tube: High strength steel. Custom stainless steel.
* Worm(Input Shaft): Hardened worm, S45C. Custom stainless steel.
* Worm Gear(Wheel): High strength bronze.
* Travelling Nut: High strength bronze.
* Housing: Ductile Iron. Custom stainless steel.

● Accessories:

* Motorized driven (AC or DC) by asynchronous motors (normal, YEJ brake, YVP variable frequency, B explosion proof, D multi-speed), stepper motors, servo motors with encoders and controllers. IEC motor flange or NEMA C-Face motor adapter for connect with motors. Frequency inverters.
* Manually operated by Aluminum handwheels, or Cast iron handwheels.
* Connection Devices: Couplings. Universal joints. Telescopic universal joints. Connecting shafts.
* Screw Protective Devices: Bellows boot. Telescopic spring covers.
* Safety Devices: Limit switches. Proximity switches. Safety nuts. Anti-backlash nut. Overload safety couplings. Stop nuts. Position Encoders. Overload clutch. Brake motor. Linear braking elements. Wear detection/monitors. Linear guides and rails. Potentiometer. Pressure sensor.
* Others Accessories: Travel nuts. Position indicators. Trunnion adapter plates. Trunnion mounting brackets. Pillow blocks. Flange blocks. Rod end bearings.

Product Description

● Applications of Synchronized Lifting

Jacton Industry provided complete lifting system design and components, Which including Actuator , motor, bevel gearbox, connecting shaft, coupling, brake, clutch etc. Customer just need let us know your requirement of total load capacity, speed, stroke and dimension, Our engineering will provided you a design scheme with calculation process and components selection, CAD drawing is also available.

Synchronized Lifting System of Two Actuators

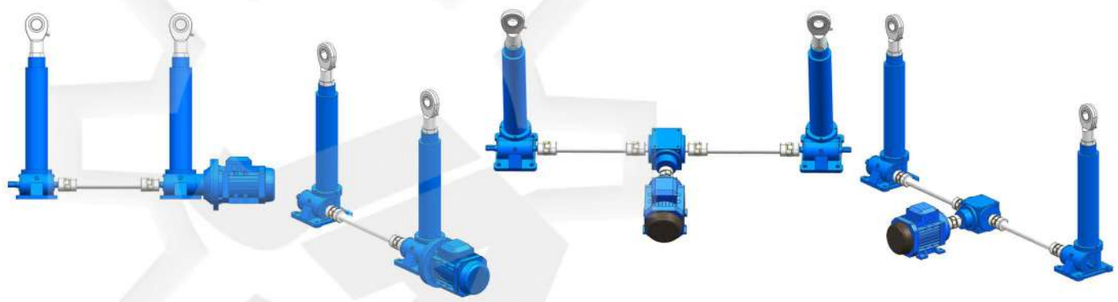

Synchronized Lifting System of Four Actuators

Sample Part Number

Sample Part Number: JTE-10T - US - 500 - H - IV - C - BB
(1) (2) (3) (4) (5) (6) (7)

(1) Models & (4) Ratios

JTE -2.5T	JTE -5T	JTE -10T	JTE -20T	H: High Ratio
H: 6:1, L: 24:1	H: 6:1, L: 24:1	H: 8:1, L: 24:1	H: 8:1, L: 24:1	L: Slow Ratio

(2) Designs and Configurations

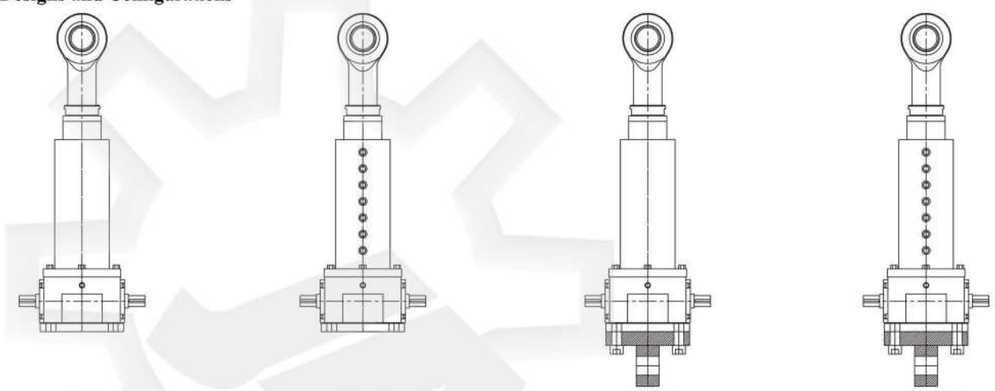

US UK USP UKP

US: Upright, Translating Design
UK: Upright, Anti-rotation Design
USP: Upright, Translating Design, Pivoting Connection
UKP: Upright, Anti-rotation Design, Pivoting Connection

(3) Stroke & (5) Screw End Fittings

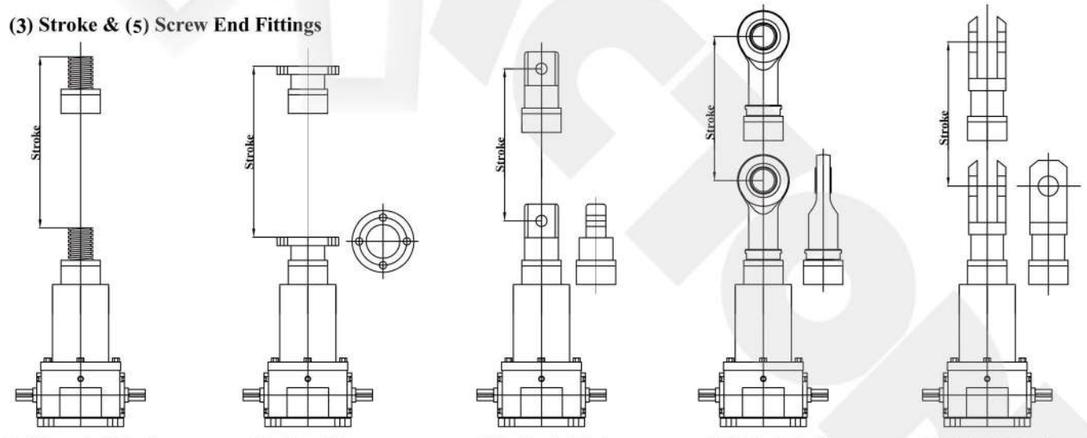

I Threaded End II Top Plate III Clevis End IV Rod End VI Fork Head

(6) Input Shafts Types & Motor Flange Types

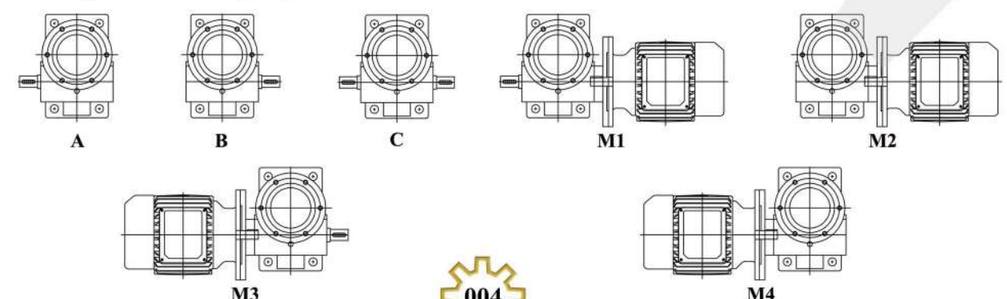

A B C M1 M2 M3 M4

Sample Part Number

(7) Special Requirements

Permissible Critical Bucking Force

The primary electric cylinders size selection factor is the bucking resistance of screw shaft,Also know as Euler cures, the graphs (**Euler 2: Guided**) below give safety operating state for each size of electric cylinder. Buckling limits are relevant for compressive load only.

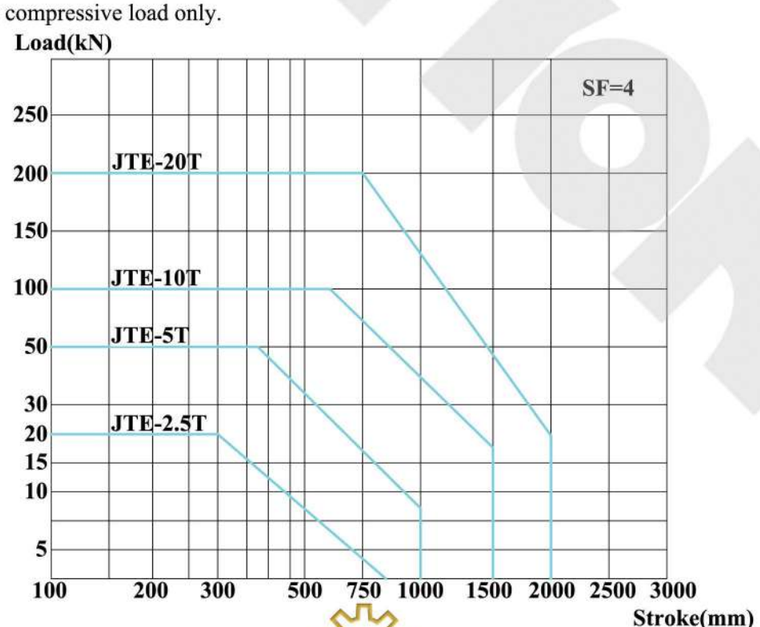

Specifications

Remarks:

1) H: high ratio, L: slow ratio

2) Max. allowable power is under the conditions that ambient temperature 20 degree C, duty cycle 20%h and input speed 1500rpm.

3) Overall efficiency is under grease lubrication.

4) Self-locking under static conditions.

Model		JTE-2.5T	JTE-5T	JTE-10T	JTE-20T
Max. Load Capacity (Ton)		2.5	5	10	20
Lift screw sizes (mm)		Tr26 x 5	Tr40 x 8	Tr50 x 10	Tr65 x 12
Root Dia. of screw (mm)		19.7	30.5	38.4	51.3
Gear ratio	H	6:1	6:1	8:1	8:1
Lift screw travel (mm), per turn of input shaft	H	0.83	1.33	1.25	1.5
Efficiency %	H	21	22	22	20
Gear ratio	L	24:1	24:1	24:1	24:1
Lift screw travel (mm), per turn of input shaft	L	0.21	0.33	0.42	0.5
Efficiency %	L	12	14	15	13
Max. allowable power (kw)	H	1	2	2.8	5
	L	0.46	0.63	1.4	3.2
No-load torque (Nm)		0.62	1.4	2	3.9
Permissible torque of input shaft (Nm)		49	153.9	292	292
Required torque of input shaft at max. load (Nm)	H	16.1	48.7	90.7	238.1
	L	7.4	20	45.3	124
Permissible max. speed (RPM) of input shaft at max. load	H	600	400	300	200
	L	600	300	300	250
Lift screw rotational torque (Nm) at max. load		65.1	201.5	503.6	1287.7

Dimensions

JTE-2.5T

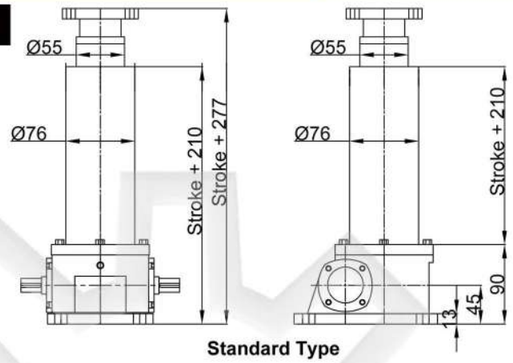

Standard Type

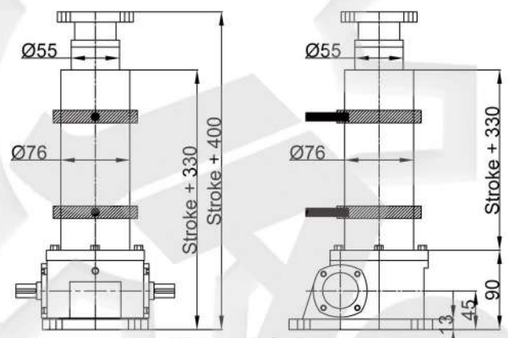

With Limit Switches

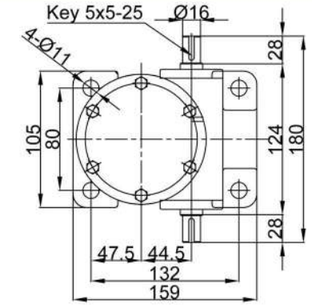

Screw End Types and Dimensions

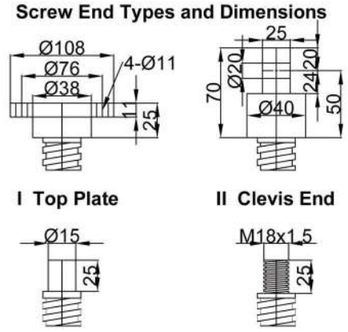

I Top Plate II Clevis End

III Plain End IV Thread End

JTE-5T

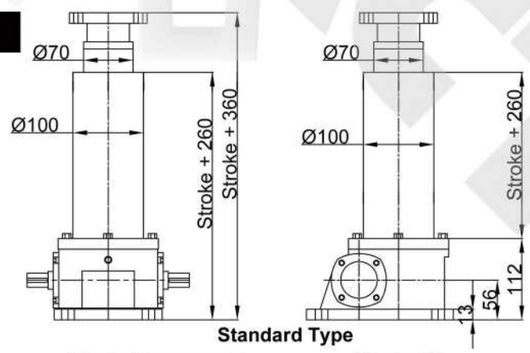

Standard Type

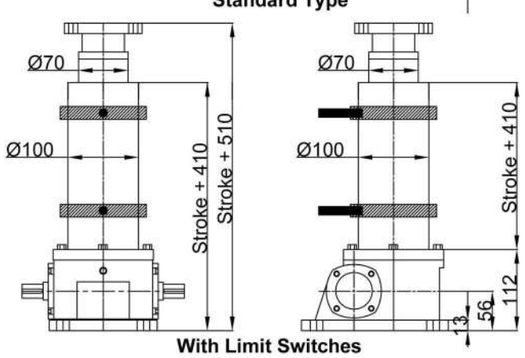

With Limit Switches

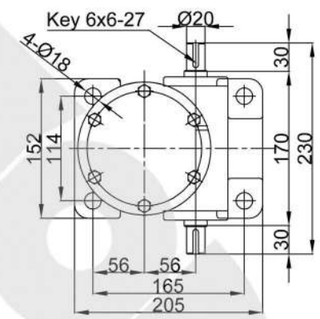

Screw End Types and Dimensions

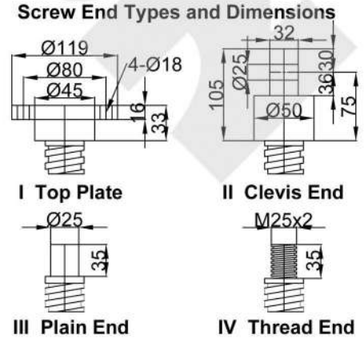

I Top Plate II Clevis End

III Plain End IV Thread End

*. Dimensions are subject to change without notice

Dimensions

JTE-10T

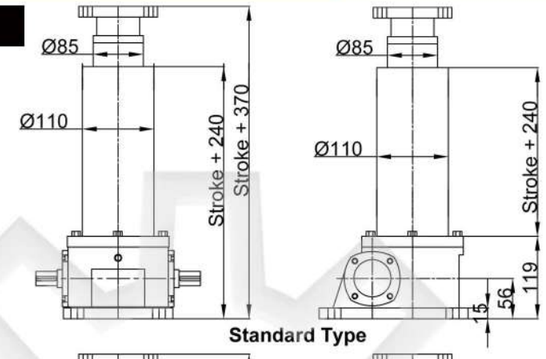

Standard Type

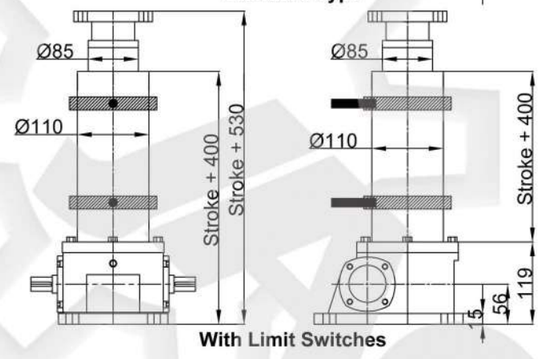

With Limit Switches

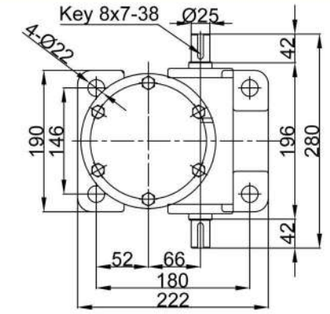

Screw End Types and Dimensions

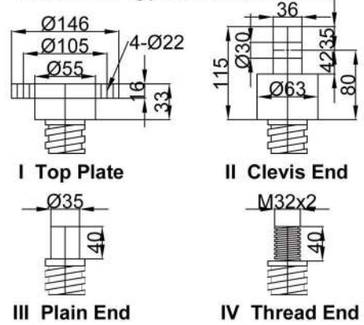

I Top Plate II Clevis End

III Plain End IV Thread End

JTE-20T

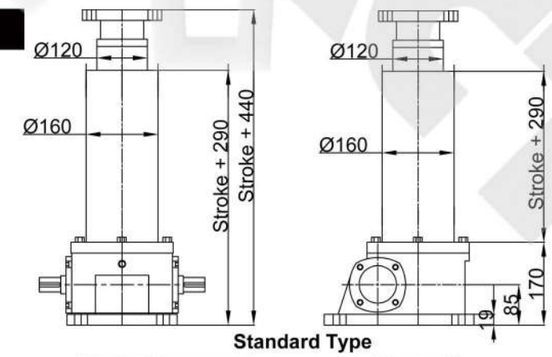

Standard Type

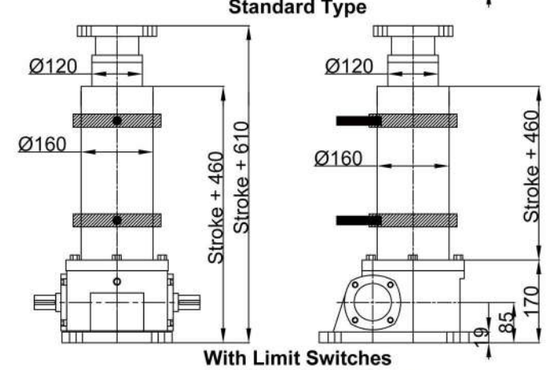

With Limit Switches

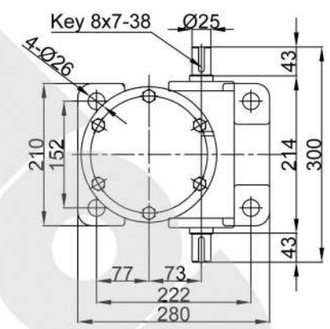

Screw End Types and Dimensions

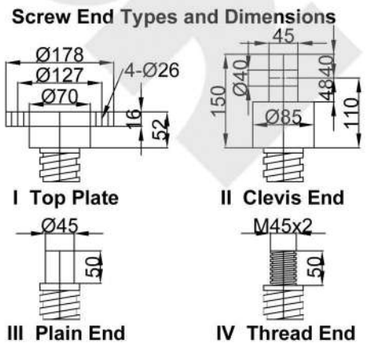

I Top Plate II Clevis End

III Plain End IV Thread End

*. Dimensions are subject to change without notice